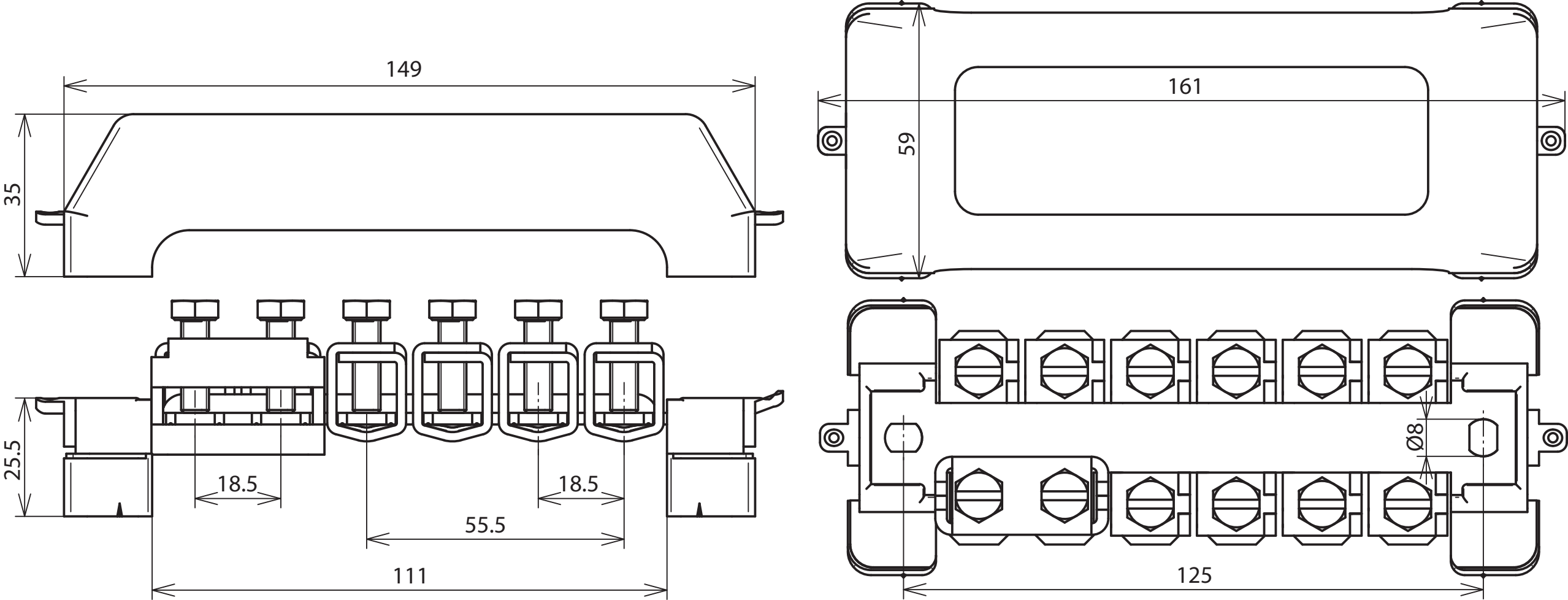
149
35
161
59
25.5
18.5
18.5
55.5
111
Ø8
125